RoHS COMPLIANT

Material:
* Insulator:UL 94V-0 NYLON 6/6
* Contact:Brass

2509P ** V * 0 *
1 2 3

1.No.of circuits
2.Plating:
0=Tin plated 120u"min over 30u"min.nickel overall
U=Gold flash over 30u"min. nickel overall
3.Color：0=white，1=black

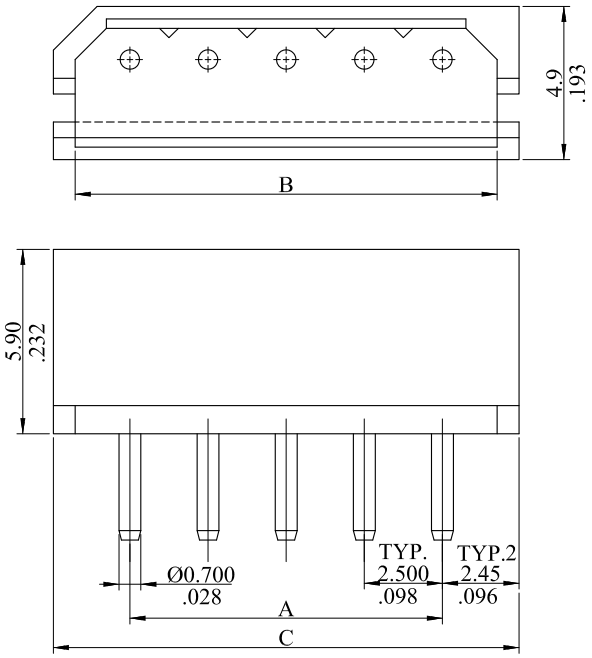

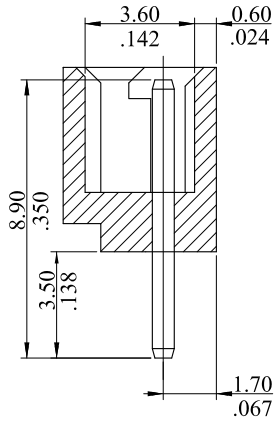

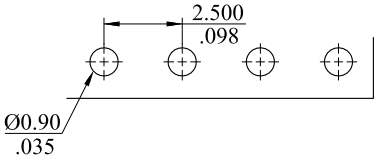

RECOMMENDED HOLE PATTERN

circuits	DIM A	DIM B	DIM C
15	35.00(1.378)	38.50(1.516)	39.9(1.571)
14	32.50(1.280)	36.00(1.417)	37.4(1.472)
13	30.00(1.181)	33.50(1.319)	34.9(1.374)
12	27.50(1.083)	31.00(1.220)	32.4(1.276)
11	25.00(.984)	28.50(1.122)	29.9(1.177)
10	22.50(.886)	26.00(1.024)	27.4(1.079)
09	20.000(.787)	23.50(.925)	24.9(.980)
08	17.500(.689)	21.00(.827)	22.4(.882)
07	15.000(.591)	18.500(.728)	19.9(.783)
06	12.500(.492)	16.000(.630)	17.4(.685)
05	10.000(.394)	13.500(.531)	14.9(.587)
04	7.500(.295)	11.000(.433)	12.4(.488)
03	5.000 (.197)	8.500(.335)	9.9(.390)
02	2.500(.098)	6.000(.236)	7.4(.291)

REV.	ECO. NO.	DISCRIPTION
E	ES130803	ADD COLOR BLACK
D	ES101254	
C	ES061012	
B	ES990130	
A	DWG REL	

LEOCO CORPORATION

GENERAL TOLERANCES:
(UNLESS SPECIFIED)

	mm	inch
1 PLACE	± 0.30	± ——
2 PLACES	± 0.20	± .012
3 PLACES	± 0.10	± .008
4 PLACES	± ——	± .004
ANGULAR ± (1°)		

APPROVED: Tommy
DATE:
CHECKED: CHARD
DATE:
DRAWN: smile
DATE:2013.08.02

PART NO.: 2509P**V*0*
TITLE: HEADER
DRAWING NO.: 250903S

UNITS	SCALE	SIZE	SHEET	REV.
mm / inch	~	A4	1/1	E