Note:

1.Contact Resistance: 30 mΩ Max;
2.Dielectric Withatanding Voltage:100V AC For 1 Minute;
3.Insulation Resistance:100 MΩ Min;
4.Mating And Unmating Force:
Mating Force: 35N Max/Unmating Force: 8N Min;
5.Durability:10000 Cycles;

RoHS COMPLIANT

Material:
Plastic: LCP,UL94V-0,Black
Contact: Copper alloy
Shell: Stainless Steel, Tin plated

Order Information:

0650SBB * 300
1

1.Contact plating:
J= 15μ" selective Gold plated over 30μ" min. Nickel
K= 30μ" selective Gold plated over 30μ" min. Nickel

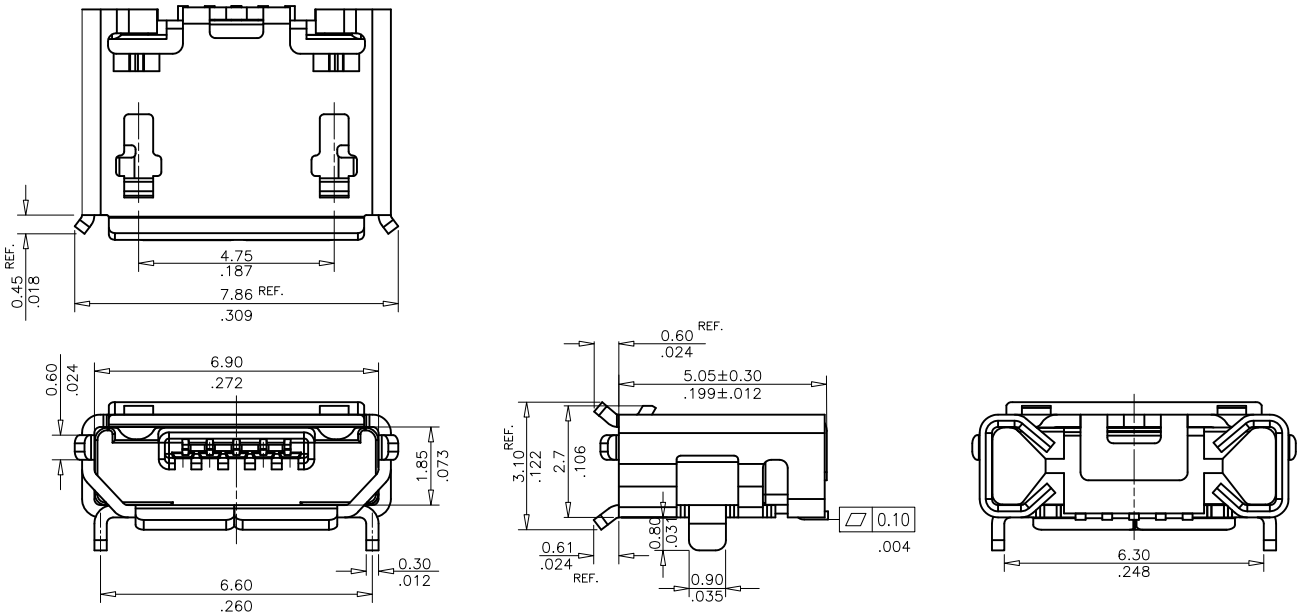

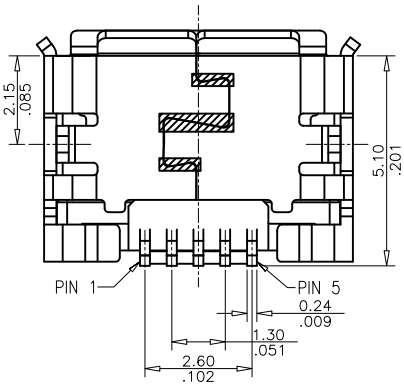

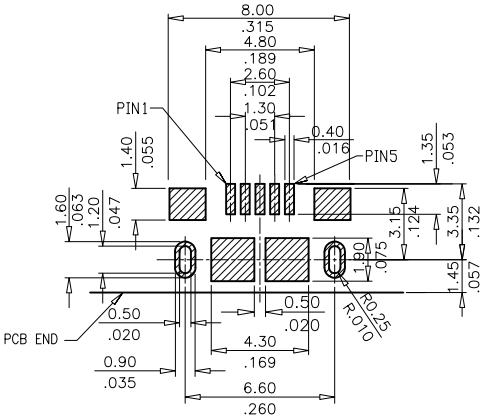

REFERANCE PCB LAYOUT
SCALE 1:2(TOLERANCE:±0.05)

REV	ECO.NO.	DESCRIPTION
C	ES151225	MODIFYINCH NUMERICAL VALUE
B	ES151217	ADD IDENTIFICATION
A	DWG REL	/

LEOCO CORPORATION

GENERAL TOLERANCES:
(UNLESS SPECIFIED)

	mm	inch
1 PLACE	± 0.30	± ——
2 PLACES	± 0.20	± .012
3 PLACES	± 0.10	± .008
4 PLACES	± ——	± .004
ANGULAR ± (1°)		

APPROVED: Chard DATE: 2015/12/28
CHECKED: JACK DATE: 2015/12/22
DRAWN: Sandra DATE: 2015/12/17

PART NO.: 0650SBB*300
TITLE: MICRO USB B TYPE RECEPTACLE 5 PIN, SMT
DRAWING NO.: 065002S

UNITS	SCALE	SIZE	SHEET	REV.
mm / inch	1:1	A4	1/1	C